KEND®
The Italian Art of Lock Systems

CISA®

DOOR & WINDOW ACCESSORIES

Showroom :
Jakarta & Tangerang : ●Kebon Jeruk (021) 536 3506 ●Pinangsia (021) 690 5280 ●Kenari Baru (021) 391 4370 ●Plaza Kenari Mas (021) 3984 2790 ●Fatmawati (021) 720 0630 ●Summarecon Mall Serpong (021) ●**Bandung :** Jl. Kebon Kawung no. 64 A-B (022) 426 6388 ●**Semarang** : Jl. H. Agus Salim, Komplek THD Blok C/8 (024) 356 4254/55 ●**Jogjakarta** : Jl. Magelang KM 1 No.67 Kav. C, Kricak - Tegalrejo (0274) 562 312 ●**Denpasar** : Jl. Teuku Umar Barat No. 55 (0361) 490 678 ●**Makassar** : Jl. Sulawesi No.201 (0411) 361 0030

Distributor Resmi :
● **Surabaya :** ● PT. Andhipaputra Rekayasa (031) 548 0808 ● ROOMS (031) 531 2000 ● **Denpasar :** PT. Adika Jaya Dewata (0361) 264 410 ● **Lombok :** Athaya Woods (0370) 630 999

KENARI DJAJA
SINCE 1965
We provide more than security

Butt Hinge - Stainless Steel

SEL0018

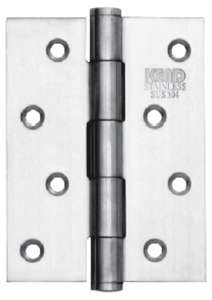
SEL0007

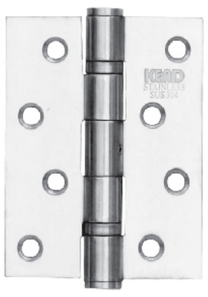
SEL0010

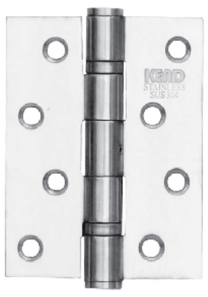
SEL0010 SUS316

SEL0019

SEL0011

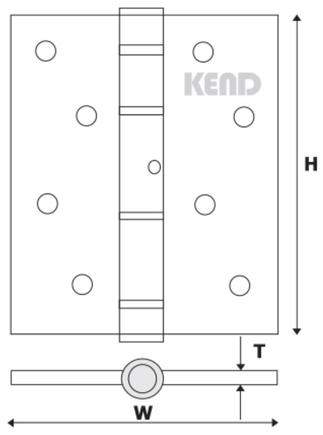

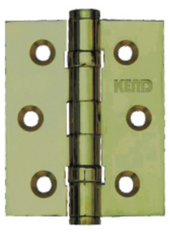
SEL0020

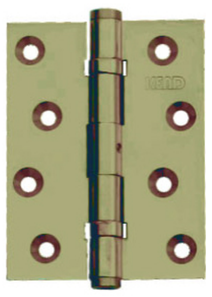
SEL0015

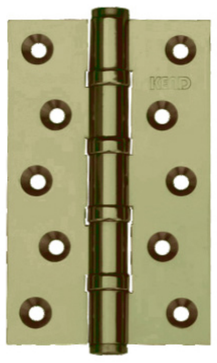
SEL0021

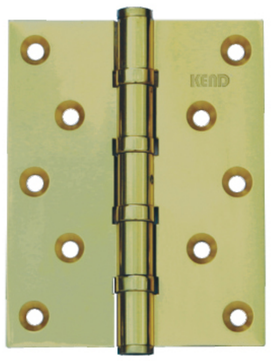
SEL0016

Type	OPEN SIZE			Finish	BB	NRP	CAPACITY (kg)
	H (Inch)	W (Inch)	T (mm)				
SEL 0007	4	3	2.5	US32D	-	-	40
SEL 0010	4	3	3	US32D	2BB	✔	70
SEL 0011	5	4	4	US32D	4BB	✔	100
SEL 0018	3	2.5	2	US32D	2BB	✔	30
SEL 0019	5	3	4	US32D	4BB	✔	85
SEL 0015	4	3	4	AB	2BB	✔	70
SEL 0016	5	4	5	AB	4BB	✔	100
SEL 0020	3	2.5	3	AB	2BB	✔	30
SEL 0021	5	3	5	AB	4BB	✔	85

Miscellaneous Hinge

Heavy Duty Hinges

Offset Pivot Hinge
OPH 75-R1 RH/LH

Intermediate Pivot
OPH 75-R2 RH/LH

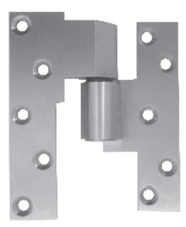

Material : Stainless Steel
Finish : US32D

Type	Capacity
OPH 75-R1	170 Kg
OPH 75-R1 + OPH 75-R2	230 Kg

Technical Feature :
- For use on high frequency and/or heavy wood or Metal doors (Single action) with radial roller and thrust ball bearing in the bottom pivot
- Intermediate Pivot keeping the door in the alignment
- is equipped with a radial roller and thrust bearing
- Capacity maximum : 230 Kg
- Fire rated
- Material : Stainless steel
- Finish : US32D (Satin Stainless Steel)
- Please specified Handing when ordering (LH/RH)

Center Pivot Hinge
CPH 20-500

Top Pivot

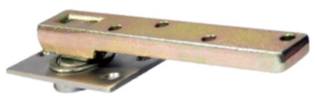
Bottom Pivot

Technical Feature :
- For use on high frequency and/or heavy wood or Metal doors (Double action)
- With ball bearing in the bottom pivot and adjustable vertical and horizontal in the top pivot
- Capacity maximum : 170 Kg
- Fire rated
- Material : Stainless steel
- Finish : US32D (Satin Stainless Steel)

Invisible Hinge
Merubah Posisi Pintu Tanpa Melepasnya

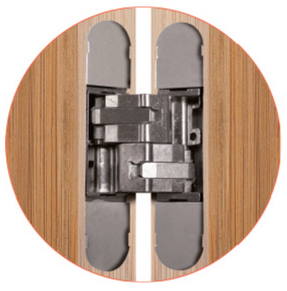

Technical Data	
Min. Door Thick	: 40 mm
Max. Door Weight	: 120 kg
Max. Door Opening	: 180°
Gap When Door Closed	: 2 mm

Type : 1131
Finish : US32D
Capacity : 120 Kg (3 pieces)

- Terdapat feature 3D movement.
- Dapat merubah posisi daun pintu (naik/turun, kanan/kiri, maju/mundur) tanpa perlu melepas engsel.

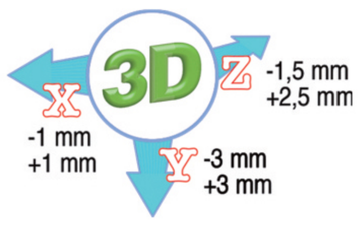

Concealed Hinge
for Single Action Door

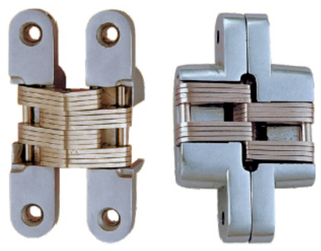

Type : 116
Material : Zinc Alloy
Finish : US26
Capacity : 50Kg

Steel Hinge 497
for Steel Door

Material : Steel & Brass Pin
Finish : USP
Capacity : 200Kg

Spring Hinge 2062
for Single Action Door

Material : Stainless Steel
Finish : US32D
Dimention : 2062 4"X3"X3" mm
Capacity : 40Kg

Door & Window Accessories

Security Bolt

5072 + Key

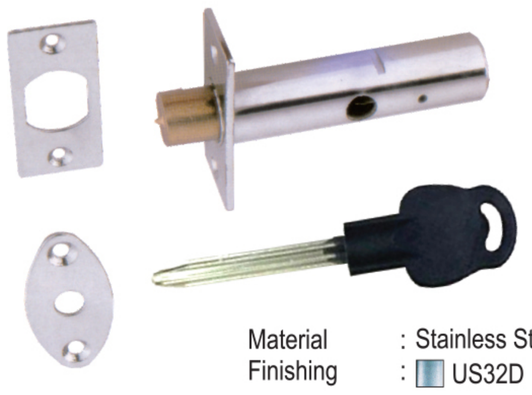

Material : Stainless Steel
Finishing : US32D

SC-5072

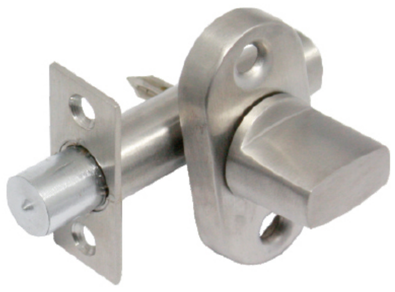

Material : Brass
Finishing : US15

Door Chain

7432

Material : Stainless Steel
Finishing : US32D

Barrel Bolt

440

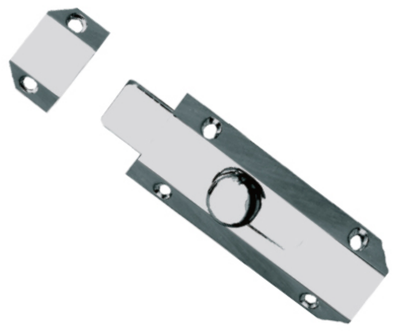

Material : Brass
Finishing : US26D
Dimention : - 440 - 3"
- 440 - 4"

Automatic Flush Bolt

75-556

Material : Stainless Steel
Finishing : US32D

Flush Bolt

306
for Wood / Metal Door

Material : Steel
Finishing : US26D
Dimention : 306 - 6"
306 - 12"

314
for Wood Door / Window

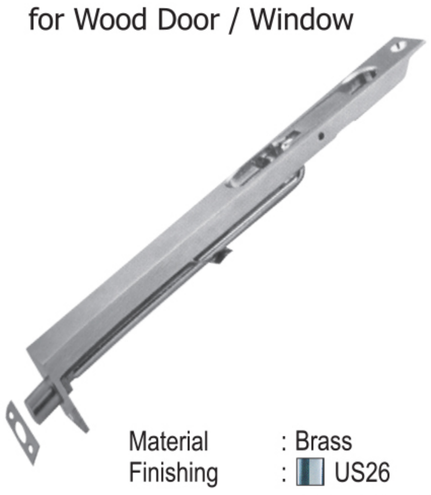

Material : Brass
Finishing : US26
Dimention : 314 - 24" x 19mm
314 - 36" x 19mm

333
for Hollow Metal / Aluminium Door

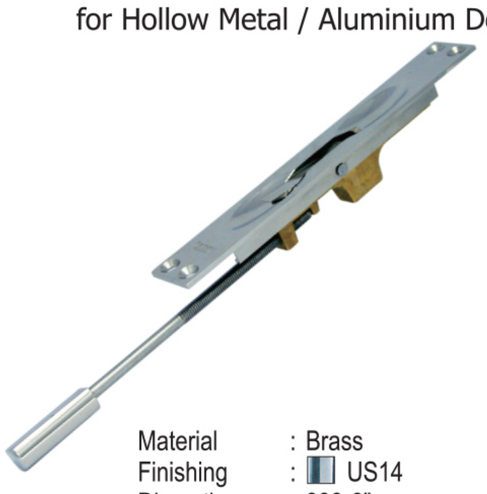

Material : Brass
Finishing : US14
Dimention : 333-6"
333-12"

Dust Proof Strike

013/12N

Material : Brass
Finishing : US26

Door Selector

0100

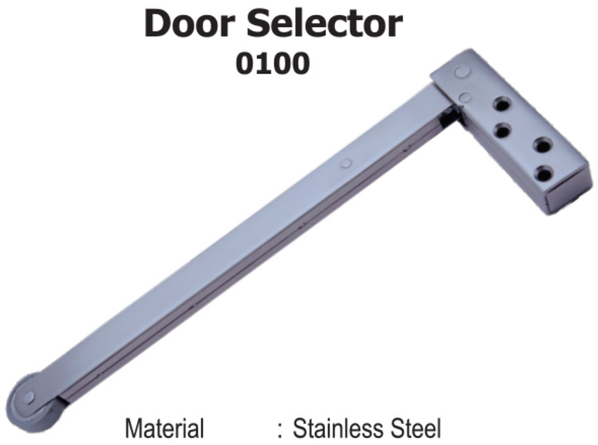

Material : Stainless Steel
Finishing : US32D

Door Viewer

35-60mm

Material : Brass
Finishing : US14

Roller Catch

RC 75-002

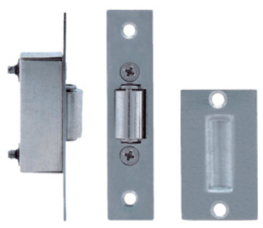

Material : Stainless Steel
Finishing : US32D

Door Stop

9916

Floor & Wall Mounted

Material : Rubber
Finishing : Black

75-034

Floor Mounted

Material : Stainless Steel
Finishing : US32D

75-035

Floor Mounted

Material : Stainless Steel
Finishing : US32D

75-036

Wall Mounted

Material : Stainless Steel
Finishing : US32D

75 - 014

Floor Mounted

Material : Zinc Alloy
Finishing : US14D

75 - 016

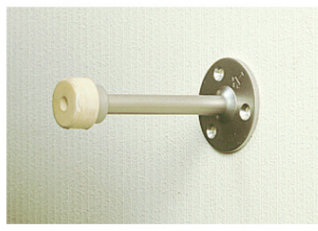

Wall Mounted

Material : Stainless Steel
Finishing : US32D

75 - 017

Wall Mounted

Material : Stainless Steel
Finishing : US32D

75 - 026

Floor Mounted

Material : Stainless Steel
Finishing : US32D

75 - 027

Floor Mounted

Material : Brass & Magnet
Finishing : AB
US26

Smart Door Closer

- DCL 83210.2-4 RA
- DCL 83210.2-4 HO

Finish : Silver

DCL 83270 - 4 SA

Dimension Layout

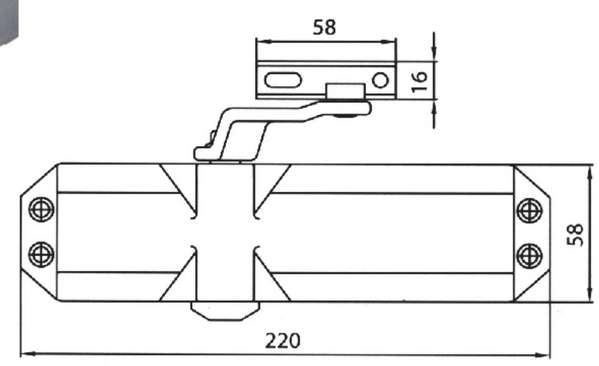

Dimension Layout

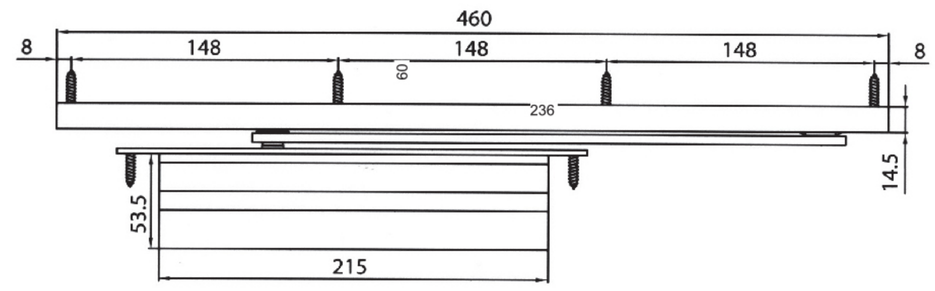

Specifications

Closing Force	2 - 4 (By Position)		
Application	Non Handed		
Max. Door Width	1100 mm		
Max. Door Weight	80 Kg		
Closing Speed Angle	15° - 180° Adjustable by Valve		
Latching Speed Angle	0° - 15° Adjustable by Valve		
Arm Optional	RA (Regular Arm)		
	HO (Hold Open Arm)		
Technical Data	EN2	EN3	EN4
Max. Door Width	850 mm	950 mm	1100 mm
Max. Door Weight	35 Kg	60 Kg	80 Kg

Specifications

Closing Force	Fix Size
Application	Non Handed
Max. Door Width	1100 mm
Max. Door Weight	80 Kg
Closing Speed Angle	15° - 115° Adjustable by Valve
Latching Speed Angle	0° - 15° Adjustable by Valve
Arm	HO (Hold Open Arm), up to 110°

Concealed Door Closer

CLD 08320-4

Finish : Silver

Dimension Layout

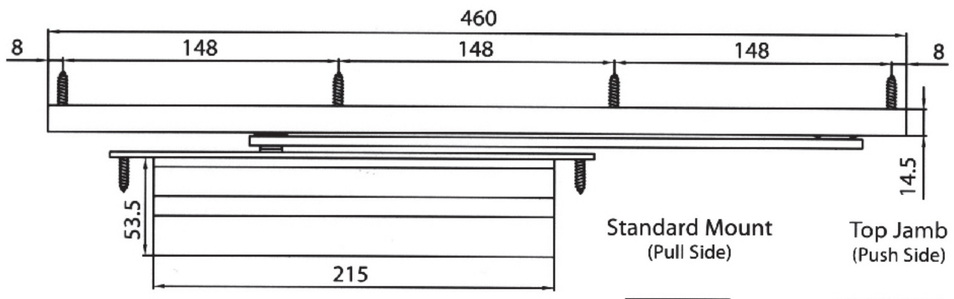

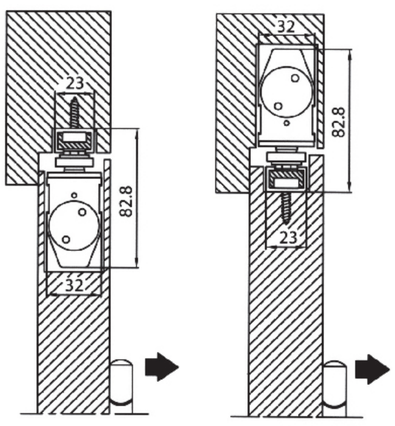

Specifications

Closing Force	Fix Size
Application	Non Handed / Double Action
Max. Door Width	1100 mm
Max. Door Weight	80 Kg
Closing Speed Angle	15° - 115° Adjustable by Valve
Latching Speed Angle	0° - 15° Adjustable by Valve
Door Opening Angle	115°
Arm	HO (Hold Open Arm), up to 110°

Floor Hinge

FH 08323

Dimension Layout

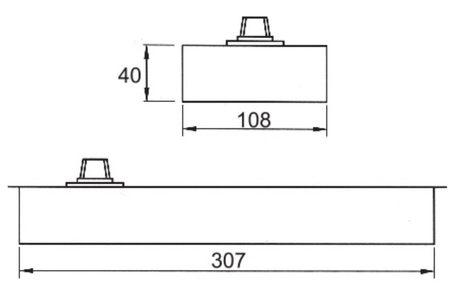

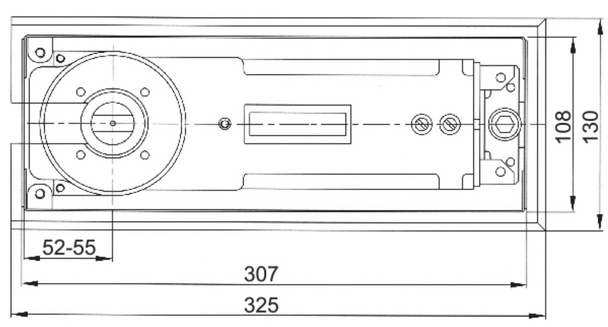

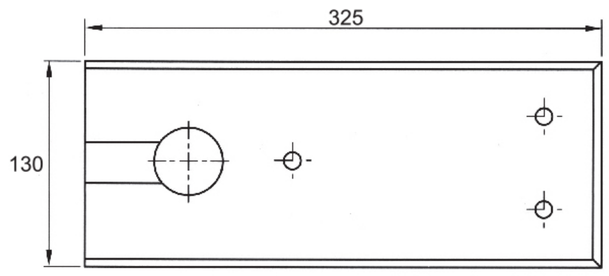

Specifications

Closing Force	Fix Size
Application	Non Handed / Double Action
Max. Door Width	1100 mm
Max. Door Weight	100 Kg
Closing Speed Angle	15° - 130° Adjustable by Valve
Latching Speed Angle	0° - 15° Adjustable by Valve
Door Opening Angle	130°
Mechanical Hold Open	90°

CISA® Smart Door Closer

WARRANTY 3 YEARS FOR HYDROULIC

- C 1415 RA
- C 1416 HO

Finish : Silver & Dark Brown

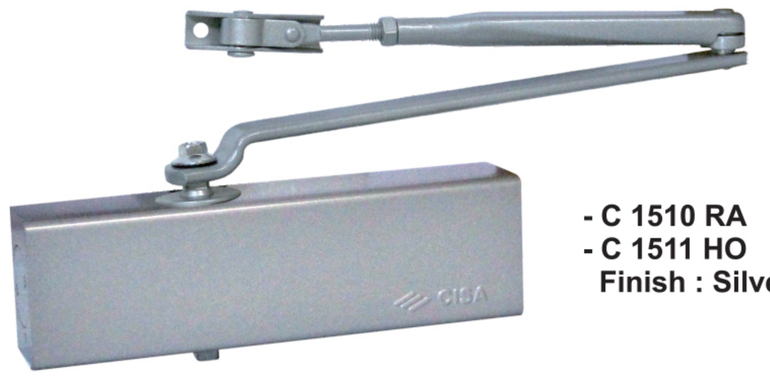

- C 1510 RA
- C 1511 HO

Finish : Silver & Dark Brown

Dimension Layout

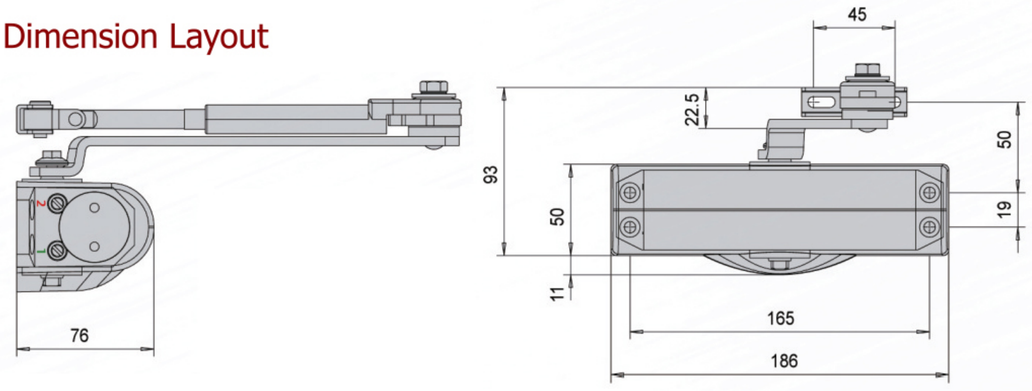

Specifications

Closing Force	Smart 2 - 3 - 4 (By Position)
Application	Non Handed
Max. Door Width	1100 mm
Max. Door Weight	80 Kg
Closing Speed Angle	15° - 180° Adjustable by Valve
Latching Speed Angle	0° - 15° Adjustable by Valve
Arm Optional	RA (Regular Arm)
	HO (Hold Open Arm)

Dimension Layout

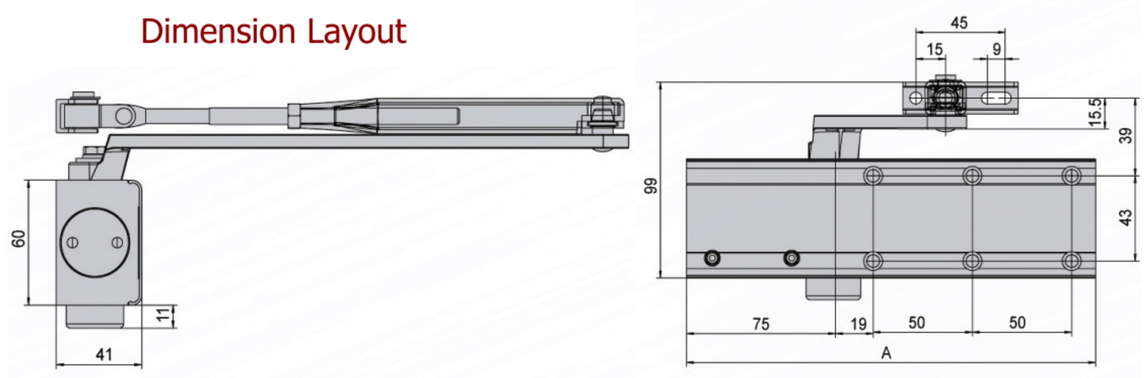

Specifications

Closing Force	Smart 2 - 3 - 4 (By Position)
Application	Non Handed
Max. Door Width	1100 mm
Max. Door Weight	80 Kg
Closing Speed Angle	15° - 180° Adjustable by Valve
Latching Speed Angle	0° - 15° Adjustable by Valve
Arm Optional	RA (Regular Arm)

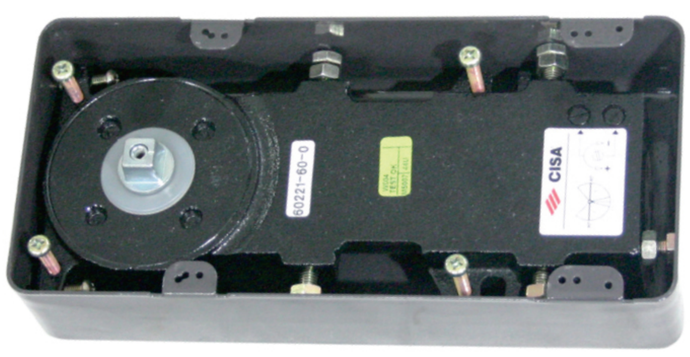

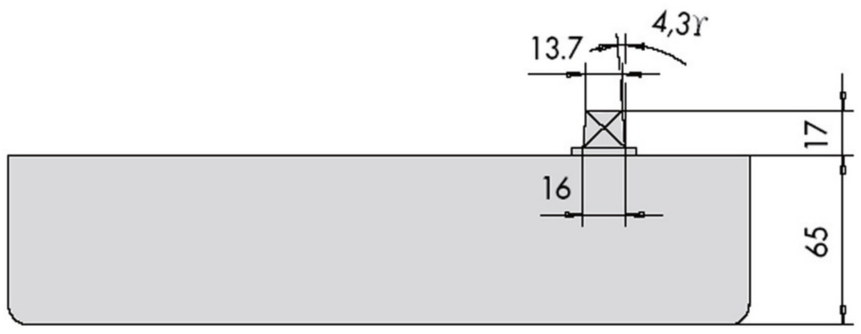

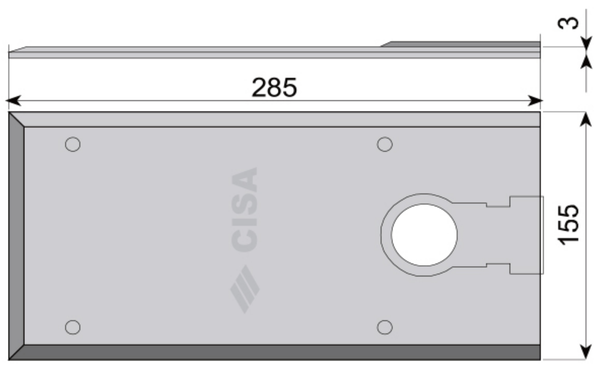

07124

Finishing :
Satin Stainless Steel

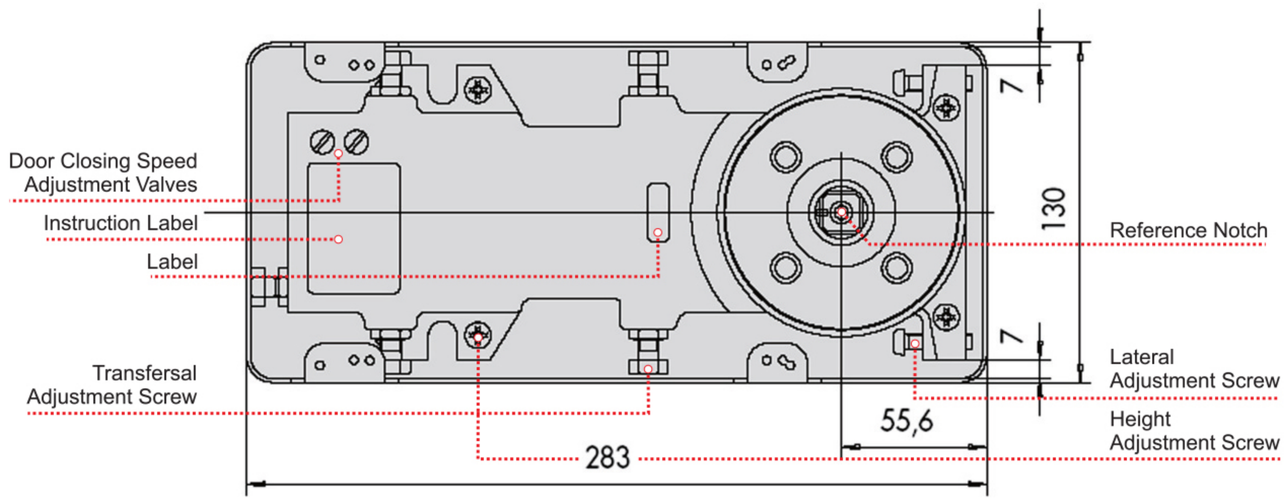

Type	Hold Open	Maximum Door Width		Maximum Door Weight (kg)	Features
		Interior (mm)	Exterior (mm)		
60231 - 04	90°	1100	1000	100	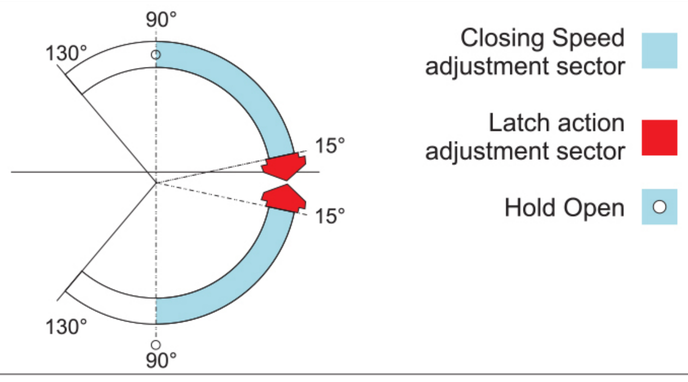
60241 - 04	90°	1300	1200	200	

Panic Exit

Touch Bar Series Panic Exit Devices - Hold Open
85500 - P

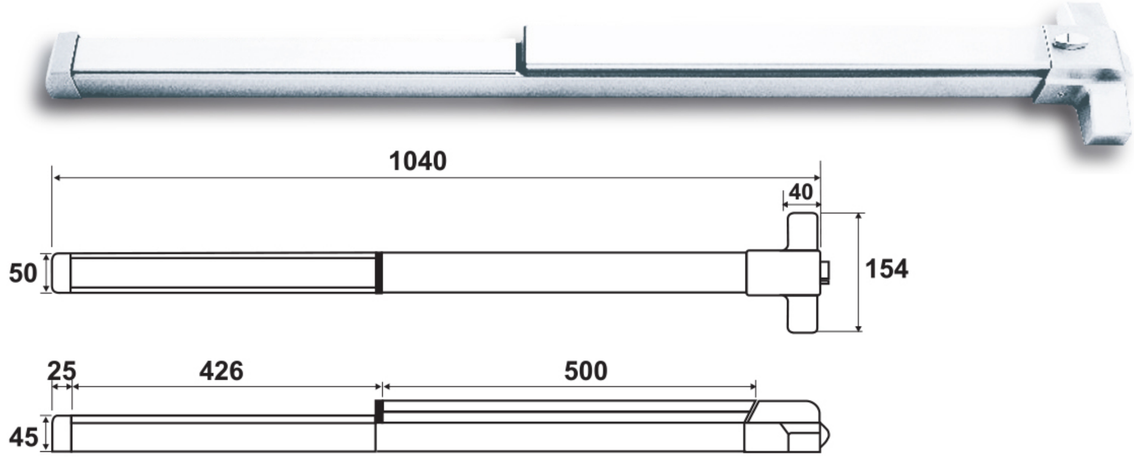

Technical Feature

- Cases and latch bolt in stainless steel material
- Standard length 1040 mm, can be cut to 750 mm
- Hold Open (latch bolt can be activated or disactivated)

Finishing

- Grey Painted

Hand

- Non Handed

Outside Handle (Optional)

- 75213 Round

Outside Cylinder (Optional)

- 12500

Outside Cylinder
KEND 12500 for Kend Panic Exit

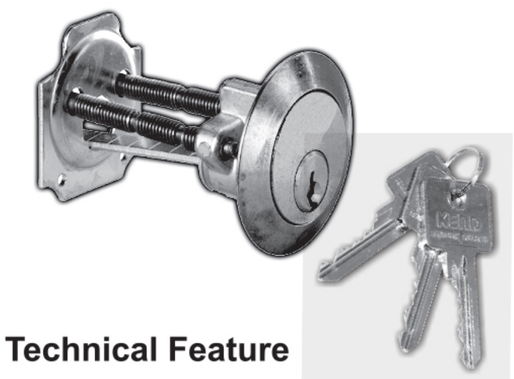

Technical Feature

- Masterkey available on request

KEND 12500 DT (Disk Tumbler)

Technical Feature

- Key alike available on request

Outside Handle
KEND 75213 (Round)

Material :

- Stainless Steel

Finishing :

- Satin Stainless Steel (US32D)

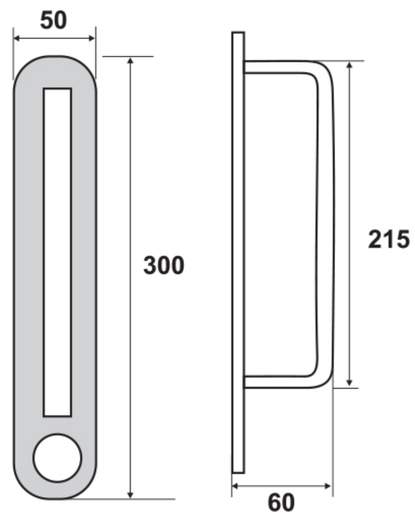

Panic Exit Devices
PNC.877003

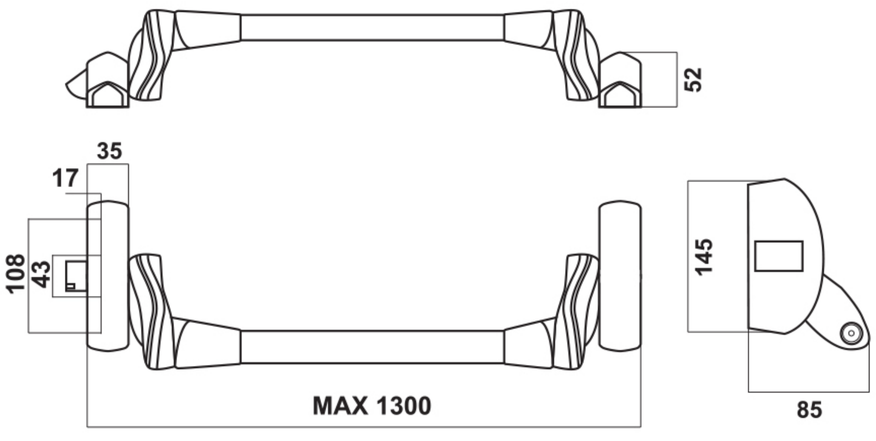

Technical Feature

- Max Door Width : 130 cm
- Alluminium case cover painted black
- Chrome-plated alluminium alloy self-locking latch
- Adjustable length horizontal bar in red painted steel
- Non Handed
- Outside Handle Optional

Finishing

- Painted Black

Certification

- Manufactured in conformity with the European standard UNI/EN 1125 on escape/door equipment
- CE (Conformité Européene)

Optional
Outside Handle HDL.877000 + Cylinder

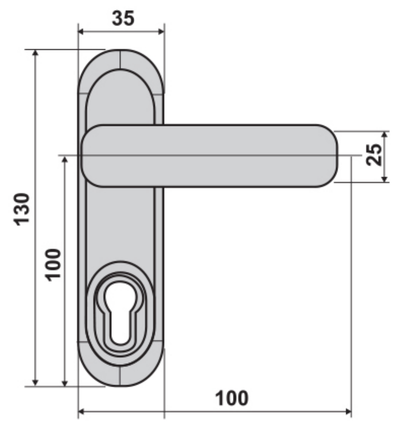

Panic Exit Devices
59011-10
*New*EUROPA

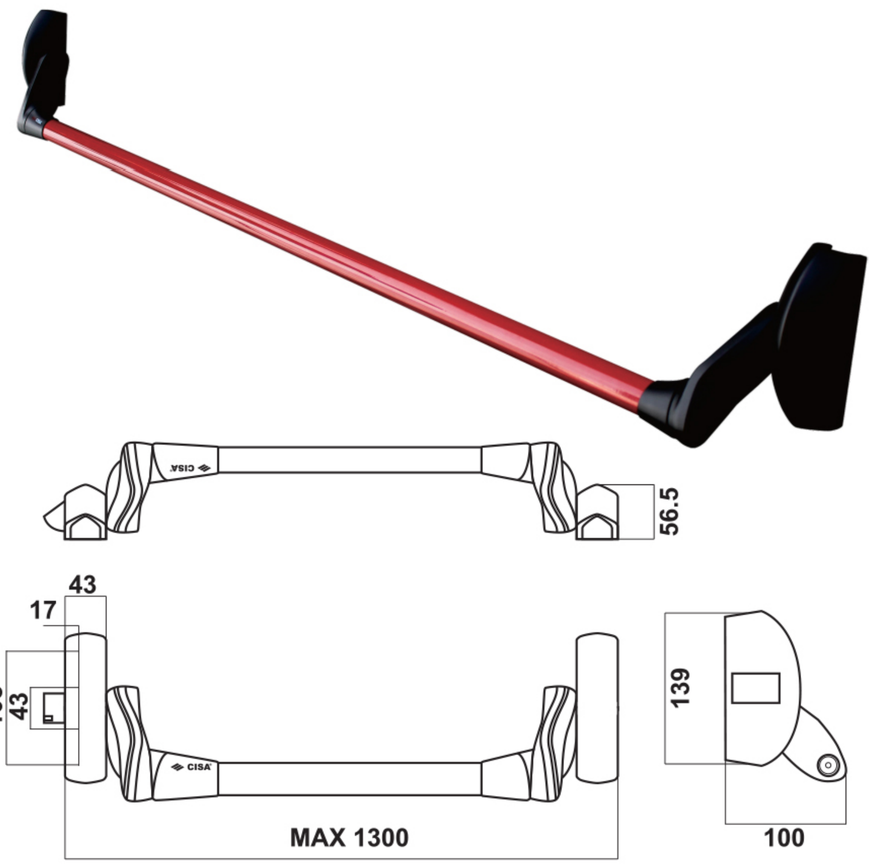

Set of Bolt
07063

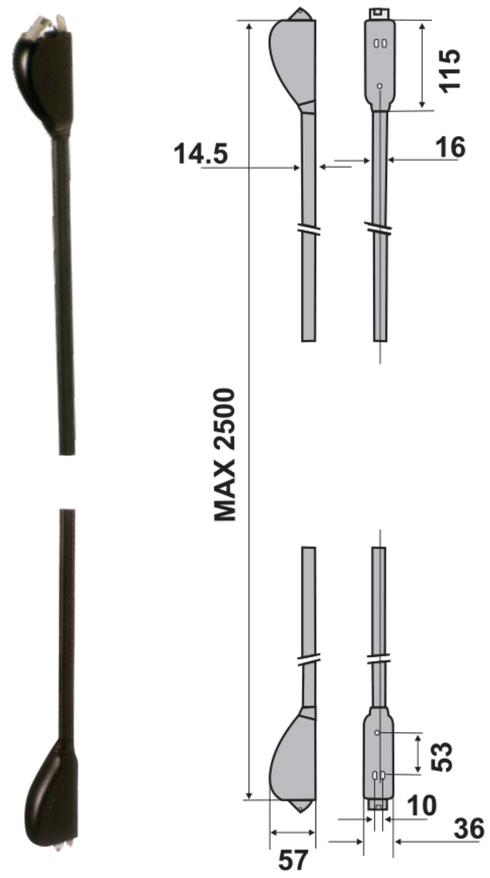

Technical Feature
- Aluminium case cover, painted black
- Chrome-plated aluminium alloy self-locking latch
- Adjustable length horizontal bar in red painted steel
- Masterkey available on request

Finishing
- Painted black

Hand
- Non Handed

Certification
- Certified compliance with the European standard UNI/EN 1125 on escape/door equipment
- CE (Conformité Européene)

Outside Handle (Optional)
- 07078-68 or
- 07078-69

Prestige
Panic Exit Devices
59301 - 10

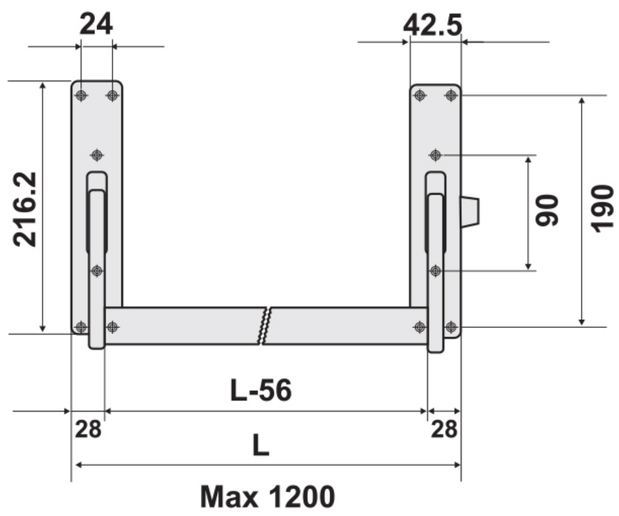

Technical Feature
- Black laquared steel casing
- Adjustable length horizontal bar in stainless steel
- Chrome-plated aluminium alloy self-locking latch
- Masterkey available on request

Finishing
- Painted black

Hand
- Non Handed

Certification
- Manufactured in conformity with the European standard UNI/EN 1125 on escape/door equipment
- CE (Conformité Européene)

Outside Handle (Optional)
- 07078-68 or
- 07078-69

Outside Handle 07078-68
Suitable For : • 59011-10 Black
• 59301-10 Black

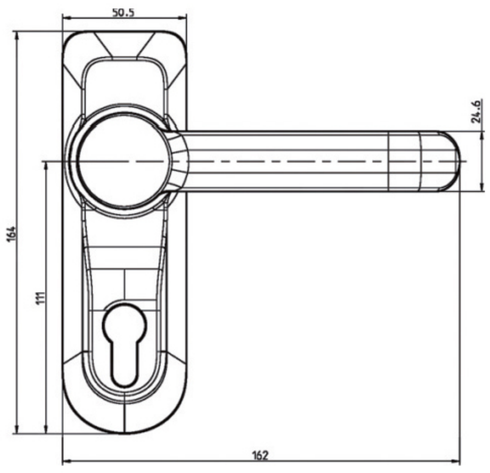

Technical Feature
Black painted aluminium alloy plate with lever handle and cylinder.

Outside Handle 07078-69
Suitable For : • 59011-10 Black
• 59301-10 Black

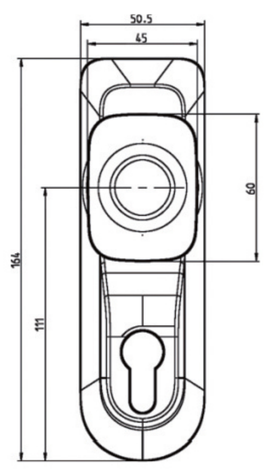

Technical Feature
- Black painted aluminium alloy plate with fix handle and cylinder.
- Masterkey available on request

Window Accessories

Window Hook

SWH 128.01 LH (safety)

Material
- Material : Stainless Steel
- Finishing : US32D

Window Lock

SWL 128.02 LH (safety)

Material
- Material : Steel Wire
- Finishing : White

Ramskar

65-V70

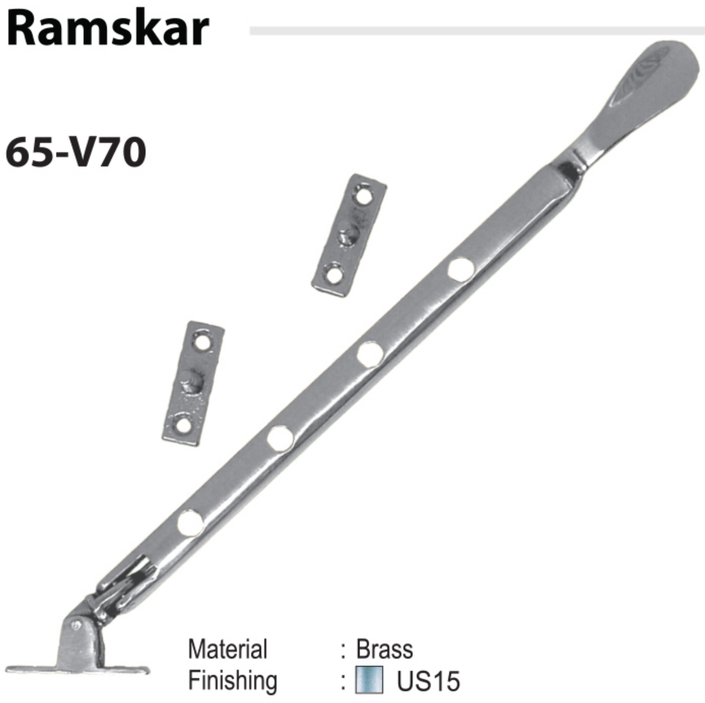

Material : Brass
Finishing : US15

76-032

Material : Stainless Steel
Finishing : US32D

321

Material : Brass
Finishing : US15
US3

Rambuncis

413 RH

Material : Aluminium
Finishing : Offwhite

76-034

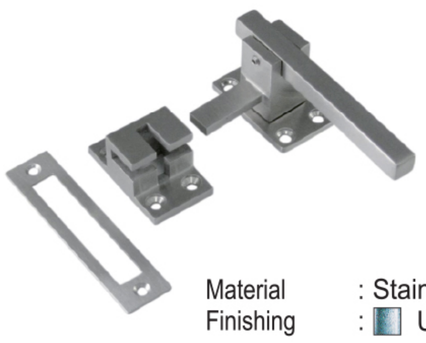

Material : Stainless Steel
Finishing : US32D

Springknip

75-378

Material : Zinc Alloy
Finishing : US26D

Casement for Aluminium Window

5 Bar Casement

Material : Stainless Steel

Type	Dimention		CAPACITY Max weight (KG)	TOP HUNG Max height (CM)	SIDE HUNG Max widht (CM)
	Inch	MM			
CMT 45-008" BRS	8"	203.2	19	45	60
CMT 45-012" BRS	12"	304.8	23	50	75
CMT 45-016" BRS	16"	406.4	23	80	90
CMT 45-020" BRS	20"	508.0	25	110	-
CMT 45-024" BRS	24"	609.6	29	120	-
CMT 75-036"	36"	914.4	32	160	-